Grand boitier pour thermoplongeur ou capteur de temperature.
En acier inoxydable AISI 304 ou AISI 316

Taille(mm)	Volume(cm^3)	Matière	Degrés de protection		Modèle
125 × 125 × 130	1505	acier inoxydable	IP69K	IK7	**Y3S7**

Utilisable pour

- ☐ Capteur de température
- ☒ Thermoplongeur
- ☒ Résistance à ailettes
- ☒ Thermostat
- ☐ Détecteur de niveau
- ☒ Carte électronique

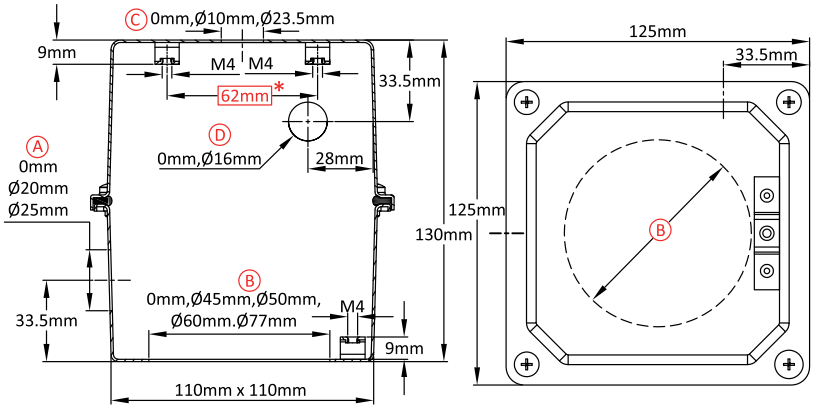

Références principales

Ⓐ (mm)	Ⓑ (mm)	Ⓒ (mm)	Ⓓ (mm)	304	316	Ⓐ (mm)	Ⓑ (mm)	Ⓒ (mm)	Ⓓ (mm)	304	316	Ⓐ (mm)	Ⓑ (mm)	Ⓒ (mm)	Ⓓ (mm)	304	316
0	0	0	0	Y3S70000000G1008	Y3S70000000G1009	20	0	0	0	Y3S70000120G1008	Y3S70000120G1009	25	0	0	0	Y3S70000125G1008	Y3S70000125G1009
0	0	0	16	Y3S70000116G1008	Y3S70000116G1009	20	0	0	16	Y3S700002C0G1008	Y3S700002C0G1009	25	0	0	16	Y3S700002C5G1008	Y3S700002C5G1009
0	0	10	0	Y3S7000A000G1008	Y3S7000A000G1009	20	0	10	0	Y3S7000A120G1008	Y3S7000A120G1009	25	0	10	0	Y3S7000A125G1008	Y3S7000A125G1009
0	0	10	16	Y3S7000A116G1008	Y3S7000A116G1009	20	0	10	16	Y3S7000A2C0G1008	Y3S7000A2C0G1009	25	0	10	16	Y3S7000A2C5G1008	Y3S7000A2C5G1009
0	0	23.5	0	Y3S7000D000G1008	Y3S7000D000G1009	20	0	23.5	0	Y3S7000D120G1008	Y3S7000D120G1009	25	0	23.5	0	Y3S7000D125G1008	Y3S7000D125G1009
0	0	23.5	16	Y3S7000D116G1008	Y3S7000D116G1009	20	0	23.5	16	Y3S7000D2C0G1008	Y3S7000D2C0G1009	25	0	23.5	16	Y3S7000D2C5G1008	Y3S7000D2C5G1009
0	45	0	0	Y3S74500000G1008	Y3S74500000G1009	20	45	0	0	Y3S74500120G1008	Y3S74500120G1009	25	45	0	0	Y3S74500125G1008	Y3S74500125G1009
0	45	0	16	Y3S74500116G1008	Y3S74500116G1009	20	45	0	16	Y3S745002C0G1008	Y3S745002C0G1009	25	45	0	16	Y3S745002C5G1008	Y3S745002C5G1009
0	45	10	0	Y3S7450A000G1008	Y3S7450A000G1009	20	45	10	0	Y3S7450A120G1008	Y3S7450A120G1009	25	45	10	0	Y3S7450A125G1008	Y3S7450A125G1009
0	45	10	16	Y3S7450A116G1008	Y3S7450A116G1009	20	45	10	16	Y3S7450A2C0G1008	Y3S7450A2C0G1009	25	45	10	16	Y3S7450A2C5G1008	Y3S7450A2C5G1009
0	45	23.5	0	Y3S7450D000G1008	Y3S7450D000G1009	20	45	23.5	0	Y3S7450D120G1008	Y3S7450D120G1009	25	45	23.5	0	Y3S7450D125G1008	Y3S7450D125G1009
0	45	23.5	16	Y3S7450D116G1008	Y3S7450D116G1009	20	45	23.5	16	Y3S7450D2C0G1008	Y3S7450D2C0G1009	25	45	23.5	16	Y3S7450D2C5G1008	Y3S7450D2C5G1009
0	50	0	0	Y3S75000000G1008	Y3S75000000G1009	20	50	0	0	Y3S75000120G1008	Y3S75000120G1009	25	50	0	0	Y3S75000125G1008	Y3S75000125G1009
0	50	0	16	Y3S75000116G1008	Y3S75000116G1009	20	50	0	16	Y3S750002C0G1008	Y3S750002C0G1009	25	50	0	16	Y3S750002C5G1008	Y3S750002C5G1009
0	50	10	0	Y3S7500A000G1008	Y3S7500A000G1009	20	50	10	0	Y3S7500A120G1008	Y3S7500A120G1009	25	50	10	0	Y3S7500A125G1008	Y3S7500A125G1009
0	50	10	16	Y3S7500A116G1008	Y3S7500A116G1009	20	50	10	16	Y3S7500A2C0G1008	Y3S7500A2C0G1009	25	50	10	16	Y3S7500A2C5G1008	Y3S7500A2C5G1009
0	50	23.5	0	Y3S7500D000G1008	Y3S7500D000G1009	20	50	23.5	0	Y3S7500D120G1008	Y3S7500D120G1009	25	50	23.5	0	Y3S7500D125G1008	Y3S7500D125G1009
0	50	23.5	16	Y3S7500D116G1008	Y3S7500D116G1009	20	50	23.5	16	Y3S7500D2C0G1008	Y3S7500D2C0G1009	25	50	23.5	16	Y3S7500D2C5G1008	Y3S7500D2C5G1009
0	60	0	0	Y3S76000000G1008	Y3S76000000G1009	20	60	0	0	Y3S76000120G1008	Y3S76000120G1009	25	60	0	0	Y3S76000125G1008	Y3S76000125G1009
0	60	0	16	Y3S76000116G1008	Y3S76000116G1009	20	60	0	16	Y3S760002C0G1008	Y3S760002C0G1009	25	60	0	16	Y3S760002C5G1008	Y3S760002C5G1009
0	60	10	0	Y3S7600A000G1008	Y3S7600A000G1009	20	60	10	0	Y3S7600A120G1008	Y3S7600A120G1009	25	60	10	0	Y3S7600A125G1008	Y3S7600A125G1009
0	60	10	16	Y3S7600A116G1008	Y3S7600A116G1009	20	60	10	16	Y3S7600A2C0G1008	Y3S7600A2C0G1009	25	60	10	16	Y3S7600A2C5G1008	Y3S7600A2C5G1009
0	60	23.5	0	Y3S7600D000G1008	Y3S7600D000G1009	20	60	23.5	0	Y3S7600D120G1008	Y3S7600D120G1009	25	60	23.5	0	Y3S7600D125G1008	Y3S7600D125G1009
0	60	23.5	16	Y3S7600D116G1008	Y3S7600D116G1009	20	60	23.5	16	Y3S7600D2C0G1008	Y3S7600D2C0G1009	25	60	23.5	16	Y3S7600D2C5G1008	Y3S7600D2C5G1009
0	77	0	0	Y3S77700000G1008	Y3S77700000G1009	20	77	0	0	Y3S77700120G1008	Y3S77700120G1009	25	77	0	0	Y3S77700125G1008	Y3S77700125G1009
0	77	0	16	Y3S77700116G1008	Y3S77700116G1009	20	77	0	16	Y3S777002C0G1008	Y3S777002C0G1009	25	77	0	16	Y3S777002C5G1008	Y3S777002C5G1009
0	77	10	0	Y3S7770A000G1008	Y3S7770A000G1009	20	77	10	0	Y3S7770A120G1008	Y3S7770A120G1009	25	77	10	0	Y3S7770A125G1008	Y3S7770A125G1009
0	77	10	16	Y3S7770A116G1008	Y3S7770A116G1009	20	77	10	16	Y3S7770A2C0G1008	Y3S7770A2C0G1009	25	77	10	16	Y3S7770A2C5G1008	Y3S7770A2C5G1009
0	77	23.5	0	Y3S7770D000G1008	Y3S7770D000G1009	20	77	23.5	0	Y3S7770D120G1008	Y3S7770D120G1009	25	77	23.5	0	Y3S7770D125G1008	Y3S7770D125G1009
0	77	23.5	16	Y3S7770D116G1008	Y3S7770D116G1009	20	77	23.5	16	Y3S7770D2C0G1008	Y3S7770D2C0G1009	25	77	23.5	16	Y3S7770D2C5G1008	Y3S7770D2C5G1009

Presse étoupe non inclus dans les références ci-dessus. Nous consulter si vous les souhaitez.
Les dimensions encadrées en rouge sont celles prévues pour le montage des accessoires.

En raison de l'évolution technique constante de nos produits, les plans, dessins, photos et caractéristiques repris dans les pages techniques sont communiqués sans engagement et peuvent être modifiés sans préavis